UNIT MEASUREMENTS

- Custom Widths up to 14’
- Custom Heights up to 12’

FABRIC CHOICES

- Screens Fabrics
- Black Out Fabrics
- Clear Vinyl

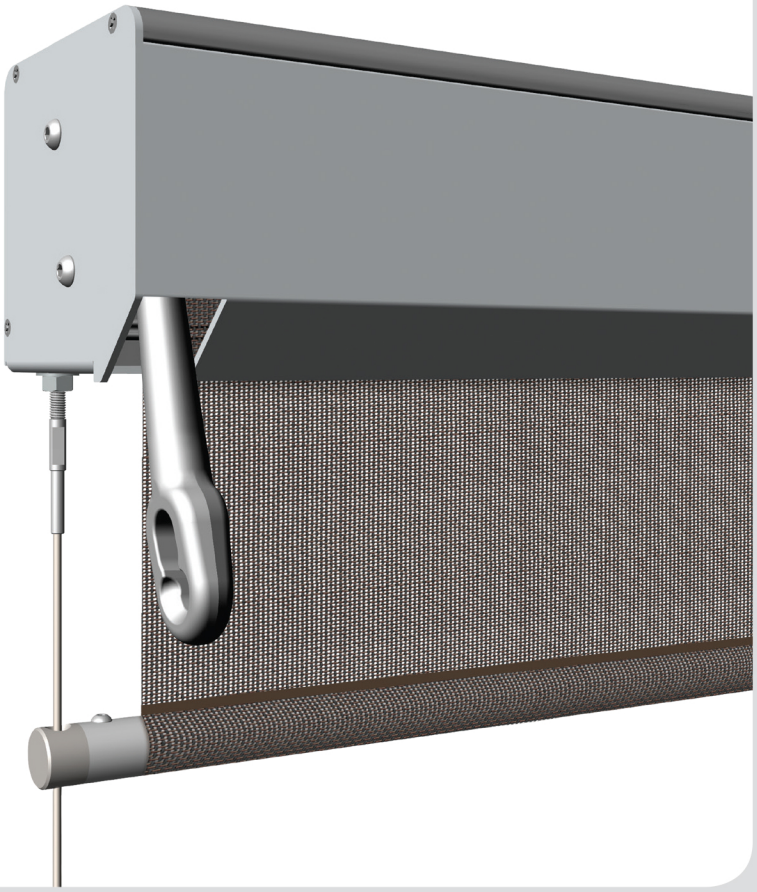

MANUAL BOX

Gear

4.5” Extruded Aluminum Box

Hand Brace

48” | 60” | 72” | 84” | 96”

Cable Guided System
Floor or Wall Mount see page 2

HARDWARE COLORS

WHITE

DESERT SAND

BROWN

BOX COLORS

WHITE | IVORY | LT. BEIGE

DK. BEIGE | SAND | BRONZE

GREY | BLACK

Motorized

NORTH SOLAR SCREEN
RULE THE SUN

UPGRADE *Options*

FRONT VIEW

MANUAL COMPONENTS

1. 7:1 120mm Gear
2. 4.5” Extruded Aluminum Box
3. 70mm Fabric Tube
4. Cradler Idler
5. Bottom Bar
6. Tension Rod with Cable
7. Simplex Fastener
8. Cable Anchor
9. Bottom Bar Eyelet
10. Cable Wall Bracket
11. Eye Bolt

SIDE VIEW

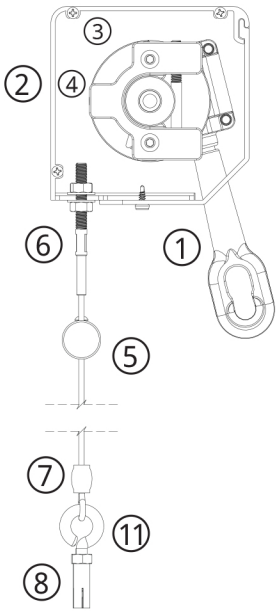

CABLE COMPONENTS

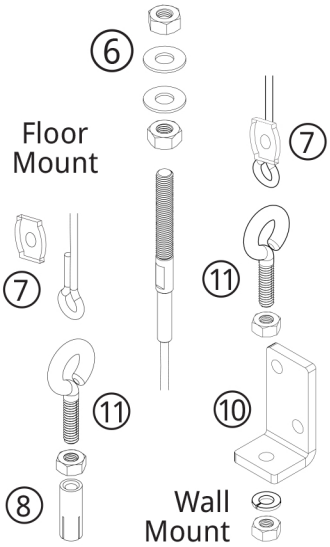

EXPLODED VIEW

1. Top Back Box Piece
2. Box Hood
3. End Cap
4. End Cap
5. 7:1 120mm Gear
6. Cradle Idler

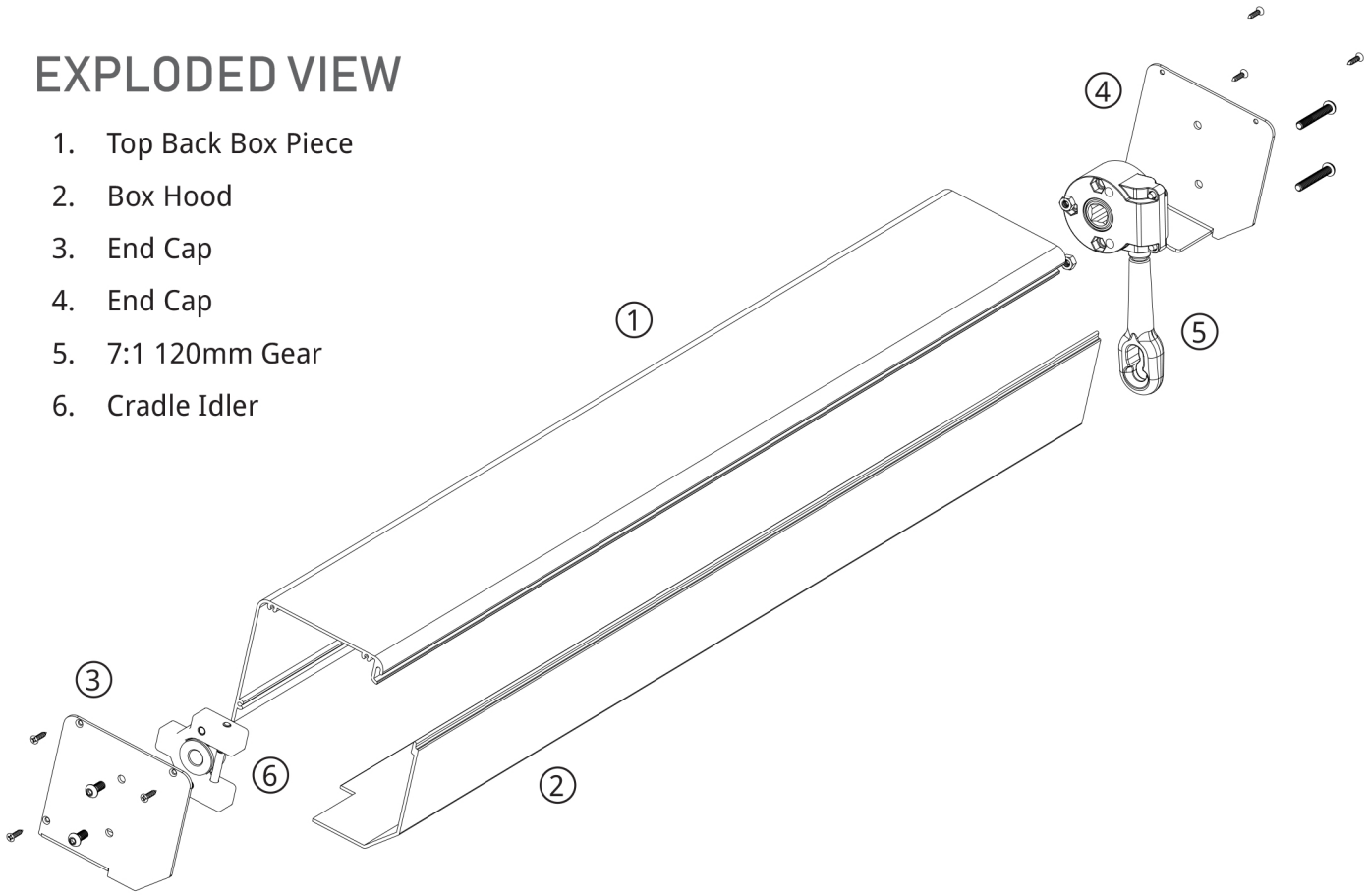

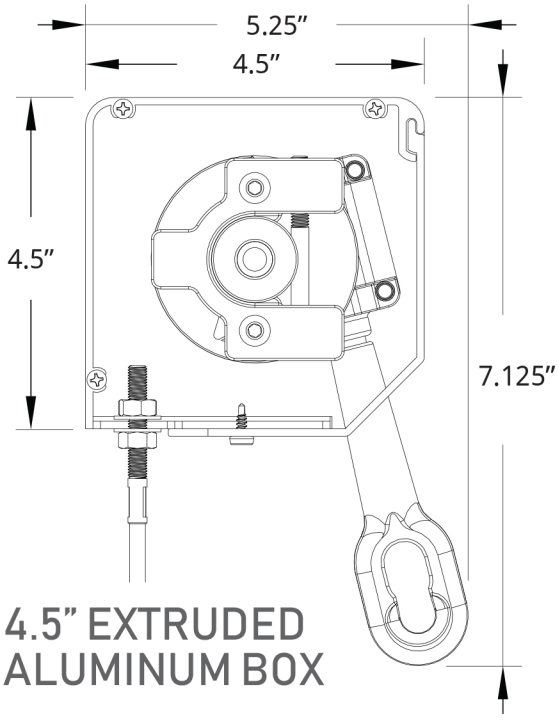

4.5” EXTRUDED ALUMINUM BOX

EXPLODED VIEW
70MM TUBE

1. 70mm Fabric Tube
2. Round Pin
3. Square Pin

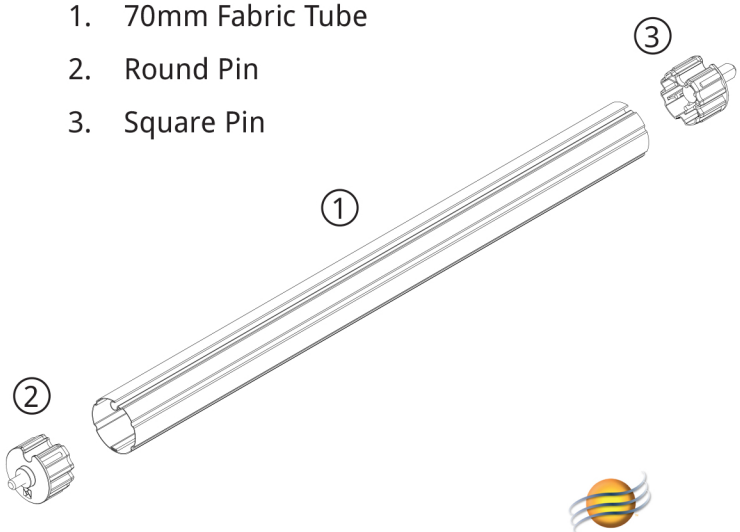

NORTH SOLAR SCREEN
RULE THE SUN